Electrolux PROFESSIONAL

Accessories
Stainless Steel 50lt Mobile Bid with Lid

ITEM #

MODEL #

NAME #

SIS #

AIA #

132926 (NCVR50) Stainless steel 50-lt Mobile Bin with lid

Short Form Specification

Item No.

Manufactured in 304 AISI stainless steel. Fitted with 2 handles. Removable lid with handle.

APPROVAL:

Main Features

- Sturdiness, stability and reliability of table accurately tested.
- Removable lid with two handles to facilitate the operations.

Construction

- Constructed entirely in 304 AISI stainless steel.
- Developed and produced in ISO 9001 and ISO 14001 certified factory.

Accessories
Stainless Steel 50lt Mobile Bid with Lid

Front

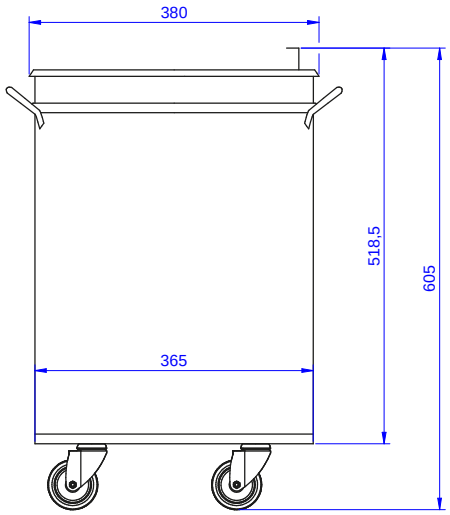

Side

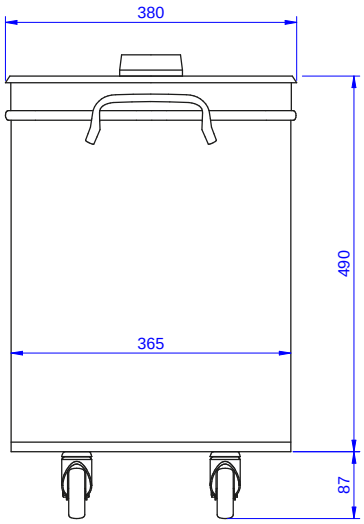

Top

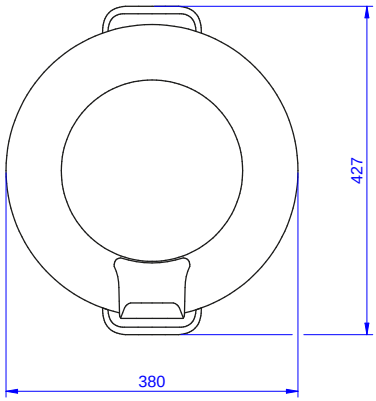

Accessories
Stainless Steel 50lt Mobile Bid with Lid

The company reserves the right to make modifications to the products without prior notice. All information correct at time of printing.

2026.03.10

Accessories
Stainless Steel 50lt Mobile Bid with Lid

Key Information:

External dimensions, Width:	
132926 (NCVR50)	380 mm
External dimensions, Depth:	427 mm
External dimensions, Height:	605 mm

The company reserves the right to make modifications to the products without prior notice. All information correct at time of printing.